AVC 2023

AVC CHALLENGE CUP FOR WOMEN

PUPUK INDONESIA HOLDING COMPANY

PETROKIMIA GRESIK Agroindustry Solution

GRESIK, EAST JAVA, INDONESIA

June 18th - 25th, 2023

Tridharma Petrokimia Gresik

BULLETIN #8

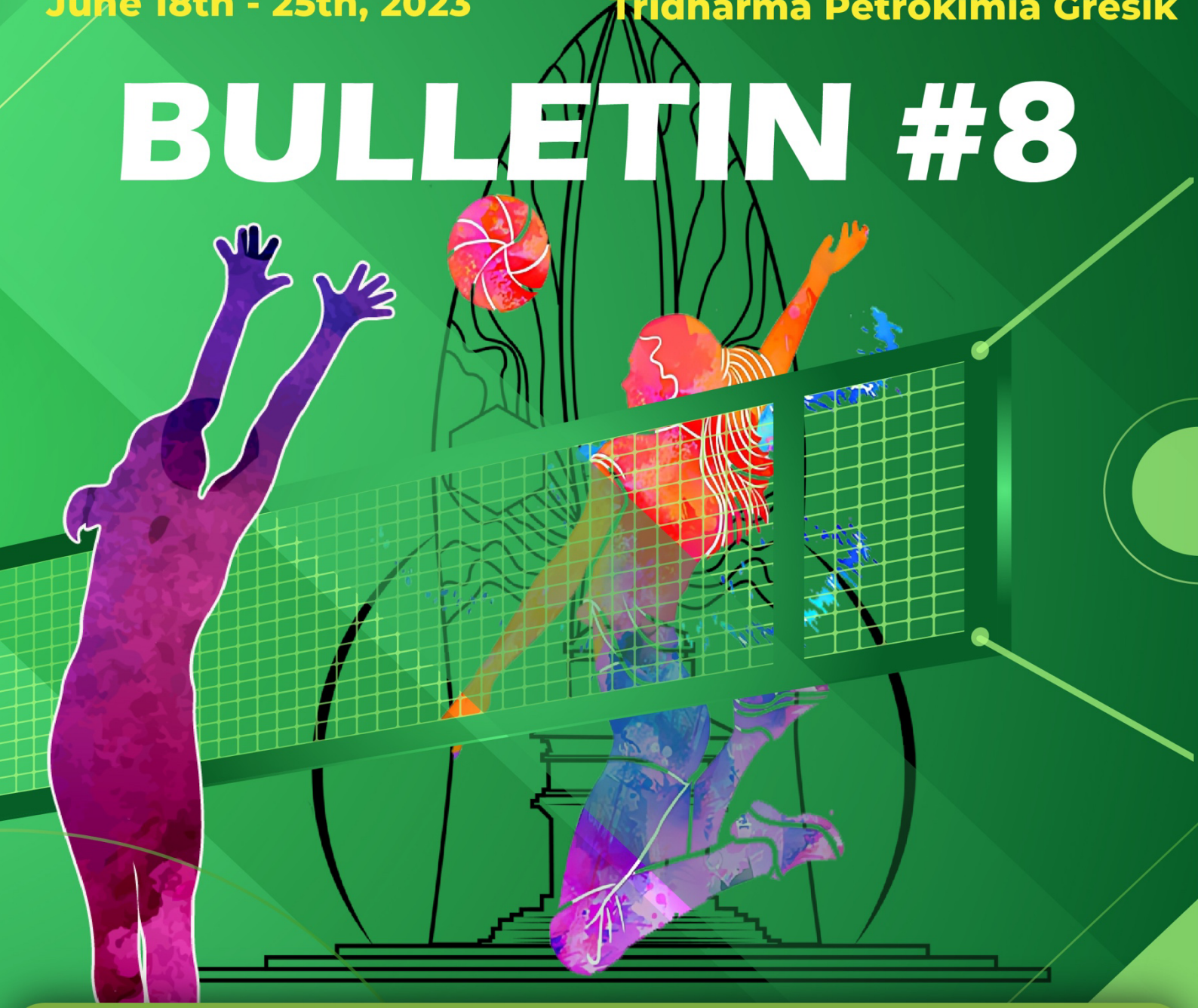

Asian Volleyball Confederation

PUPUK INDONESIA HOLDING COMPANY

PETROKIMIA GRESIK Agroindustry Solution

Vidio

moji

PBVSI

Volleyball - Teams Final Ranking

2023 AVC Challenge Cup For Women

1. VIE - VIETNAM
2. INA - INDONESIA
3. TPE - CHINESE TAIPEI
4. IND - INDIA
5. IRI - ISLAMIC REPUBLIC OF IRAN
6. AUS - AUSTRALIA
7. PHI - PHILIPPINES
8. UZB - UZBEKISTAN
9. HKG - HONG KONG, CHINA
10. MGL - MONGOLIA
11. MAC - MACAU, CHINA

Volleyball - Players Award

2023 AVC Challenge Cup For Women

Title	Team	No.	Name
Most Valuable Player	VIE	3	Tran Thi Thanh Thuy
Best Outside Spiker	VIE	3	Tran Thi Thanh Thuy
Best Outside Spiker	TPE	5	Wu Fang-Yu
Best Middle Blocker	VIE	23	Dinh Thi Tra Giang
Best Middle Blocker	INA	17	Wilda Siti Nurfadhilah
Best Opposite	INA	3	Megawati Hangestri Pertiwi
Best Setter	VIE	19	Doan Thi Lam Oanh
Best Libero	INA	1	Yulis Indahyani

Volleyball - Match Result (P2)

2023 AVC Challenge Cup For Women

Ranking - 9th-11th

Match: 25 **Date:** 2023-06-25 **Spectators:** 100
City: Gresik
Hall: Tri Dharma
Match durations: Start: 09:00 **End:** 10:07 **Total:** 01:07

Teams	Sets	1	2	3	4	5	Total
MAC	0	12	12	14			38
HKG	3	25	25	25			75
Set Durations		22	19	20			61

Referees: R1: T.V. Arunachalam [IND], R2:Alimov Farkhod [UZB]

	MAC		Line-up 1	2	3	4	5	Point 1	2	3	4	5	
1	OH	Chin C.W.	1	2				2					2
2	S	Wong H.I.	6	1	1			1					1
3	OH	Leong C.I.	2	2	5					4			4
4	MB	Tou K.K.											
8	MB	Lei I.K.	5	6	6			1	1	4			6
12	OH	Chao K.M.			2					3			3
13	L	Cheong W.L.		L									
15	MB	Lee T.C.			3								
16	OP	Lam W.T.			4					1			1
18	L	Ho W.K.	L	L	L								
19	OP	Ian U.I.	3	4	16			2	5				7
21	MB	Cheang M.I.	2	3									
22	OH	Lam N.	4	5	12			2	2				4
25	S	Chong W.S.	19	19									

Coach: NG Wai Keong
Assistants: IEONG I Kit

	HKG		Line-up 1	2	3	4	5	Point 1	2	3	4	5	
1	L	H.N.CHEUNG	L	L									
3	S	T.Y.FUNG	3					4					4
8	OH	W.L.CHIM	4	2				5	6				11
11	L	W.N.PANG	L	L	L								
15	OH	Y.C.YU	1					2					2
16	OH	M.W.CHAN	15	5	5				3	3			6
17	MB	W.J.CHOW		30	3					1			1
19	OP	W.M.TO	6	4				6	5				11
20	MB	K.T.NGAI	2	6	6			1	1	2			4
26	OP	W.L.NG		19	4					7			7
30	MB	W.N.YIM	5	3				5	1				6
44	S	Y.T.LAM	3	1	1				2				2
45	MB	K.Y.HO											
77	OH	W.T.LEE		8	2				1	4			5

Coach: KWOK Kin Chuen
Assistants: MAK Ping Leung, YEUNG Sau Mei

TEAMS AND PLAYERS PERFORMANCES

Scoring Skills	Won Points	Total Attempts	No Name
Spike	23	86	Total Team
	7	12	19 Ian U.I.
	4	12	8 Lei I.K.
	4	19	22 Lam N.
Block	2	8	Total Team
	1	2	8 Lei I.K.
	1	2	12 Chao K.M.
Serve	3	39	Total Team
	1	5	8 Lei I.K.
	1	4	3 Leong C.I.
	1	5	2 Wong H.I.
Opp. Error	10		Total Team
Total	28	133	Total Team

Scoring Skills	Won Points	Total Attempts	No Name
Spike	48	98	Total Team
	11	20	8 W.L.CHIM
	10	21	19 W.M.TO
	6	10	26 W.L.NG
Block	3	12	Total Team
	2	2	30 W.N.YIM
	1	1	3 T.Y.FUNG
Serve	8	74	Total Team
	2	7	3 T.Y.FUNG
	1	4	19 W.M.TO
	1	3	26 W.L.NG
Opp. Error	16		Total Team
Total	59	184	Total Team

Best Scorer			
7	A:7	19	Ian U.I.
6	A:4,B:1,S:1	8	Lei I.K.
4	A:3,S:1	3	Leong C.I.

Best Scorer			
11	A:10,S:1	19	W.M.TO
11	A:11	8	W.L.CHIM
7	A:6,S:1	26	W.L.NG

Name game jury president: Raditia Rahmat Darwis [INA]

Signature:

Volleyball - Match Result (P2)

2023 AVC Challenge Cup For Women

Ranking - 5th-8th

Match: 26 **Date:** 2023-06-25 **Spectators:** 150

City: Gresik

Hall: Tri Dharma

Match durations: Start: 11:30 **End:** 13:19 **Total:** 01:49

Teams	Sets	1	2	3	4	5	Total
UZB	1	14	25	18	18		75
PHI	3	25	13	25	25		88
Set Durations		26	21	28	25		100

Referees: R1: Zolbayar Ganbaatar [MGL], R2:Aaron Leo [AUS]

UZB			Line-up 1	2	3	4	5	Point 1	2	3	4	5	
1	OH	Askarova Zarnigora	3	3	3	3		2	3	1	3		9
2	OH	Tursunpulatova Malikakhon		6	6	6			4	2	3		9
3	MB	Toshkenboyeva Khodisakhon	2	2	2	2		1	3	5	5		14
4	OH	Sativoldiyeva Ezozakhon	4		4	4		1	1	4	1		7
(5)	MB	Jamolova Nozimakhon	3		4	4							
7	OH	Olimova Malikabonu	6					1					1
9	S	Jamolova Nasiba	10										
10	S	Jalolova Mukhlisakhon	1	1	1	1			2				2
11	OH	Kuchkorova Komila		4									
12	MB	Boymirzayeva Dilnoza	5	5	5	5		2	7	4	1		14
13	OH	Azimova Rukhshona											
14	L	Ismatova Ezozakhon	L	L	L	L							

Coach: Kazakov Azat

Assistants: Utanov Tavakkaljon

PHI			Line-up 1	2	3	4	5	Point 1	2	3	4	5	
1	L	Pineda	L	L	L	L							
2	S	Cheng		8	8	8							
4	OH	Samonte	10	17	12	12							
5	MB	Palaga											
6	S	Cobb	2	1	2	3					1		1
(8)	OP	Pontillas	5	4	5	6		1	4	2	5		12
9	L	Doromal	L		L	L							
10	MB	Madrigal	4	3	1	2		2	2	3	2		9
11	OH	Raagas			6	6				1			1
12	MB	Miner	1	6	4	5		4	1	2	1		8
17	OH	Nisperos	6	5	6	1		9	2	4	4		19
19	MB	Nogales											
23	OH	Adorador	3	2	3	4			3	7	5		15
24	OP	Soyud		6									

Coach: Jorge De Brito

Assistants: Ronwald Kris Dimaculangan, Cherry Macatangay

TEAMS AND PLAYERS PERFORMANCES

Scoring Skills	Won Points	Total Attempts	No Name
Spike	45	137	Total Team
	12	21	3 Toshkenboyeva Khodisakhon
	10	27	12 Boymirzayeva Dilnoza
	8	26	2 Tursunpulatova Malikakhon
Block	8	16	Total Team
	2	3	3 Toshkenboyeva Khodisakhon
	2	6	12 Boymirzayeva Dilnoza
	1	2	2 Tursunpulatova Malikakhon
Serve	3	76	Total Team
	2	15	12 Boymirzayeva Dilnoza
	1	13	1 Askarova Zarnigora
Opp. Error	19		Total Team
Total	56	229	Total Team

Scoring Skills	Won Points	Total Attempts	No Name
Spike	50	135	Total Team
	14	39	23 Adorador
	13	44	17 Nisperos
	11	24	8 Pontillas
Block	9	30	Total Team
	3	7	12 Miner
	2	3	17 Nisperos
	2	10	10 Madrigal
Serve	6	87	Total Team
	4	18	17 Nisperos
	2	12	10 Madrigal
Opp. Error	23		Total Team
Total	65	252	Total Team

Best Scorer		
14	A:10,B:2,S:2	12 Boymirzayeva Dilnoza
14	A:12,B:2	3 Toshkenboyeva Khodisakhon
9	A:7,B:1,S:1	1 Askarova Zarnigora
19	A:13,B:2,S:4	17 Nisperos
15	A:14,B:1	23 Adorador
12	A:11,B:1	8 Pontillas

Name game jury president: Raditia Rahmat Darwis [INA]

Signature:

Asian Volleyball Confederation
MIKASA Gerflor GRAND SPORT Senoh
PUPUK INDONESIA HOLDING COMPANY
PETROKIMIA GRESIK Agroindustry Solution
Vidio moji PBVSI

Volleyball - Match Result (P2)

2023 AVC Challenge Cup For Women

Ranking - 5th-8th

Match: 27 **Date:** 2023-06-25 **Spectators:** 250
City: Gresik
Hall: Tri Dharma
Match durations: Start: 14:00 **End:** 15:55 **Total:** 01:55

Teams	Sets	1	2	3	4	5	Total
AUS	1	20	25	18	20		83
IRI	3	25	19	25	25		94
Set Durations		27	27	26	27		107

Referees: R1: Hung, Tzu-Yuan [TPE], R2:Herbert Matimatico [PHI]

AUS			Line-up 1	2	3	4	5	Point 1	2	3	4	5	
1	L	Maland	L	L	L	L							
2	L	Heintzelman	L	L	L	L							
3	S	Stevens	2	1	2	1			1	1			2
8	OP	Milne	3		16	16				2			2
10	OH	Hogan											
11	MB	Dood	4	3	4			2	2				4
12	MB	Cox			11	3							
13	S	Zammit	16										
14	OH	Whincup	6	5	6	5		1	2	1	4		8
15	OH	Jones	3	2	3	2		7	6	3	5		21
16	OP	Burton	5	4	5	4		5	6	2	3		16
21	MB	Burton				12							
23	OH	Schabort			15					2			2
25	MB	Inskip	1	6	1	6		1	2		3		6

Coach: Russell Borgeaud
Assistants: Kathryn Chen

IRI			Line-up 1	2	3	4	5	Point 1	2	3	4	5	
1	OP	Aytak		13	13	13			4	5			9
2	MB	Mona	2	2	2	2				1	1		2
4	MB	Sodi	5	5	5	5		6		4	4		14
7	OP	Moni	3	3	3	3		4	5	2	10		21
9	OH	Asma											
11	OH	Mahsa	1	1	1	1		4	2	3	2		11
12	L	Negar	L	L	L	L		1					1
13	S	Negin	6	6	6	6			1				1
14	MB	Haniyeh											
15	OH	Khalili											
19	MB	Reyhan											
20	S	Dorsa		7	7	7							
22	OH	Shabnam	4	4	4	4		1	1	3	3		8
88	L	Kim		L	L	L							

Coach: Rashidi Kiklahijani Fatemeh
Assistants: Moshajari Sanati Navid, Arasteh Mahsa

TEAMS AND PLAYERS PERFORMANCES

Scoring Skills	Won Points	Total Attempts	No Name
Spike	43	143	Total Team
	17	53	15 Jones
	14	35	16 Burton
	5	27	14 Whincup
Block	13	33	Total Team
	4	6	15 Jones
	4	7	11 Dood
	2	5	14 Whincup
Serve	5	83	Total Team
	1	13	14 Whincup
	1	10	16 Burton
	1	14	25 Inskip
Opp. Error	22		Total Team
Total	61	259	Total Team

Scoring Skills	Won Points	Total Attempts	No Name
Spike	58	154	Total Team
	19	44	7 Moni
	11	18	4 Sodi
	10	30	11 Mahsa
Block	8	21	Total Team
	3	6	4 Sodi
	2	5	7 Moni
	1	3	11 Mahsa
Serve	1	94	Total Team
	1	27	2 Mona
Opp. Error	27		Total Team
Total	67	269	Total Team

Best Scorer			
21	A:17,B:4	15 Jones	
16	A:14,B:1,S:1	16 Burton	
8	A:5,B:2,S:1	14 Whincup	

Best Scorer			
21	A:19,B:2	7 Moni	
14	A:11,B:3	4 Sodi	
11	A:10,B:1	11 Mahsa	

Name game jury president: Shanrit Wongprasert [THA]

Signature:

Volleyball - Match Result (P2)

2023 AVC Challenge Cup For Women

Ranking - 1st-4th

Match: 28 **Date:** 2023-06-25 **Spectators:** 2000
City: Gresik
Hall: Tri Dharma
Match durations: Start: 16:30 **End:** 17:44 **Total:** 01:14

Teams	Sets	1	2	3	4	5	Total
TPE	3	25	25	25			75
IND	0	13	15	18			46
Set Durations		21	24	23			68

Referees: R1: Meylani Mamangkey [INA], R2:Nguyen Thi Thanh Hoa [VIE]

TPE			Line-up 1	2	3	4	5	Point 1	2	3	4	5	
1	L	Lai X.C.	L	L									
2	OP	Chang L.W.	3	4				7	5				12
5	OH	Wu F.Y.	1	2	2			2	4	4			10
6	MB	Chiu Y.H.	2	3	3			4	2	3			9
7	OH	Lin S.H.			19			1					1
8	S	Chen J.M.											
9	MB	Kan K.H.											
10	OH	Hsu W.Y.	6	6	6			1					1
11	L	Lin C.J.	L	L	L								
12	S	Liao Y.J.											
14	S	Lin C.Y.	6	1	1			1	1				2
16	OH	Chen T.Y.	4	5	5			5	6	3			14
18	OP	Hung S.H.	2	2	4				2	9			11
19	MB	Hu X.P.	5	6	6			2	1	1			4

Coach: Mr. Chen, Yu-An
Assistants: Mr. Huang, Wei-Hsiang, Miss. Teng, Yen-Min

IND			Line-up 1	2	3	4	5	Point 1	2	3	4	5	
2	L	Aswathi	L	L									
3	S	Hemlata											
6	MB	Soorya	4	3	4			2	3	2			7
7	S	Jini	2	1	2					1			1
10	OH	Nirmal	6	5	6			2	6	8			16
11	OH	Chetna											
12	OP	Jincy											
13	OH	Anushree	3	2	3			3	2	2			7
14	MB	Aswani	1	6	1				2				2
16	MB	Shilpa			14								
17	MB	Angel											
18	L	Anannaya	L	L	L								
19	OH	Shalini											
20	OP	Saranya	5	4	5			1		3			4

Coach: Mr. Chauhan Pritam Singh
Assistants: Ms. Paruchuri Radhika

TEAMS AND PLAYERS PERFORMANCES

Scoring Skills	Won Points	Total Attempts	No Name
Spike	58	114	Total Team
	12	26	16 Chen T.Y.
	11	17	2 Chang L.W.
	11	16	18 Hung S.H.
Block	3	11	Total Team
	1	2	16 Chen T.Y.
	1	1	2 Chang L.W.
	1	5	6 Chiu Y.H.
Serve	3	74	Total Team
	1	11	16 Chen T.Y.
	1	15	19 Hu X.P.
	1	6	10 Hsu W.Y.
Opp. Error	11		Total Team
Total	64	199	Total Team

Scoring Skills	Won Points	Total Attempts	No Name
Spike	35	113	Total Team
	15	46	10 Nirmal
	7	13	6 Soorya
	7	37	13 Anushree
Block	2	17	Total Team
	1	4	10 Nirmal
	1	5	14 Aswani
Serve	0	47	Total Team
Opp. Error	9		Total Team
Total	37	177	Total Team

Best Scorer	Won Points	Total Attempts	No Name
	14	A:12,B:1,S:1	16 Chen T.Y.
	12	A:11,B:1	2 Chang L.W.
	11	A:11	18 Hung S.H.

Best Scorer	Won Points	Total Attempts	No Name
	16	A:15,B:1	10 Nirmal
	7	A:7	6 Soorya
	7	A:7	13 Anushree

Name game jury president: Raditia Rahmat Darwis [INA]

Signature:

Asian Volleyball Confederation
MIKASA Gerflor GRAND SPORT Senoh
PUPUK INDONESIA HOLDING COMPANY
PETROKIMIA GRESIK Agroindustry Solution
Vidio
moji
PBVSI

Volleyball - Match Result (P2)

2023 AVC Challenge Cup For Women

Ranking - 1st-4th

Match: 29 **Date:** 2023-06-25 **Spectators:** 4000
City: Gresik
Hall: Tri Dharma
Match durations: Start: 19:00 **End:** 21:27 **Total:** 02:27

Teams	Sets	1	2	3	4	5	Total
INA	2	18	27	25	20	13	103
VIE	3	25	25	21	25	15	111
Set Durations		24	35	28	29	19	135

Referees: R1: Mohammad Reza Derafsh Kavian [IRI], R2:SIO Kit Wa [MAC]

		INA	Line-up 1	2	3	4	5	Point 1	2	3	4	5	
1	L	Indah	L	L	L	L	L						
2	OH	Ratri	2	1	1	1	2	2	2	4	4	2	14
3	OP	Megawati	4	3	3	3	4	5	12	8	5	4	34
4	S	Arneta	1	3	3	19	1						
5	OH	Medi Yoku	5	2		21	5				1	1	2
7	OH	Nandita		21	2	2							
9	OP	Hany		19	19		3			1			1
10	MB	Wulandh	3	2	2	2	3	2	1	2	2	1	8
11	MB	Myrasuci					10						
14	L	Dita	L	L	L	L	L						
15	MB	Yolla											
17	MB	Fadhilah	6	5	5	5	6	1	4	2	4	2	13
19	S	Tisya	4	6	6	6	4		1				1
21	OH	Aulia	5	4	4	4		1	3	1	2		7

Coach: M. Alim Suseno
Assistants: Robbi Meliala, Pedro Bhertolomeus Lilipaly

		VIE	Line-up 1	2	3	4	5	Point 1	2	3	4	5	
3	OH	T.T.T.THUY	2	2	2	5	5	7	4	4	5	3	23
6	L	N.T.K.LIEN											
8	OH	P.T.N.ANH	23	23	3	23	23						
9	MB	T.T.B.THUY											
11	OP	H.T.K.TRINH	4	4	4	4	4	4	8	5	3	3	23
12	L	N.K.DANG	L	L	L	L	L					1	1
14	S	V.T.K.THOA		11	19								
15	MB	N.T.TRINH	3	3	3	3	3	2	2	1	1	3	9
16	OH	V.T.N.QUYNH			20	2	2			3	5	3	11
17	OP	D.T.XUAN		19					2				2
19	S	D.T.L.OANH	1	1	1	1	1				1	1	2
20	OH	T.T.LINH	5	5	5	16	16		4				4
22	MB	L.T.LUYEN											
23	MB	D.T.T.GIANG	6	6	6	6	6	6			2		8

Coach: Mr. Nguyen Tuan Kiet
Assistants: Mr. Nguyen Trong Linh, Mrs. Tran Thi Thu Hien

TEAMS AND PLAYERS PERFORMANCES

Scoring Skills	Won Points	Total Attempts	No Name
Spike	68	179	Total Team
	32	69	3 Megawati
	12	38	2 Ratri
	12	22	17 Fadhilah
Block	7	18	Total Team
	2	2	21 Aulia
	2	9	10 Wulandh
	1	1	3 Megawati
Serve	5	104	Total Team
	2	21	10 Wulandh
	1	16	3 Megawati
	1	18	2 Ratri
Opp. Error	23		Total Team
Total	80	301	Total Team

Scoring Skills	Won Points	Total Attempts	No Name
Spike	64	159	Total Team
	20	57	3 T.T.T.THUY
	20	40	11 H.T.K.TRINH
	8	19	16 V.T.N.QUYNH
Block	15	31	Total Team
	4	4	23 D.T.T.GIANG
	3	4	16 V.T.N.QUYNH
	2	5	3 T.T.T.THUY
Serve	4	110	Total Team
	1	21	3 T.T.T.THUY
	1	15	11 H.T.K.TRINH
	1	23	15 N.T.TRINH
Opp. Error	28		Total Team
Total	83	300	Total Team

Best Scorer			
34	A:32,B:1,S:1	3	Megawati
14	A:12,B:1,S:1	2	Ratri
13	A:12,B:1	17	Fadhilah

Best Scorer			
23	A:20,B:2,S:1	3	T.T.T.THUY
23	A:20,B:2,S:1	11	H.T.K.TRINH
11	A:8,B:3	16	V.T.N.QUYNH

Name game jury president: Shanrit Wongprasert [THA]

Signature:

Volleyball - Pool Ranking

2023 AVC Challenge Cup For Women

Ranking - Pool 1st-4th

Matches

No	Pool	Date	Time	Teams	1	2	3	4	5	Sets	Points	Duration
23	1st-4th	2023-06-24	16:30	**INA** vs TPE	22:25	26:24	22:25	25:20	15:12	3-2	110:106	02:37
24	1st-4th	2023-06-24	19:00	IND vs **VIE**	17:25	18:25	21:25			0-3	56:75	01:17
28	1st-4th	2023-06-25	16:30	**TPE** vs IND	25:13	25:15	25:18			3-0	75:46	00:43
29	1st-4th	2023-06-25	19:00	INA vs **VIE**	18:25	27:25	25:21	20:26	13:15	2-3	103:112	02:27

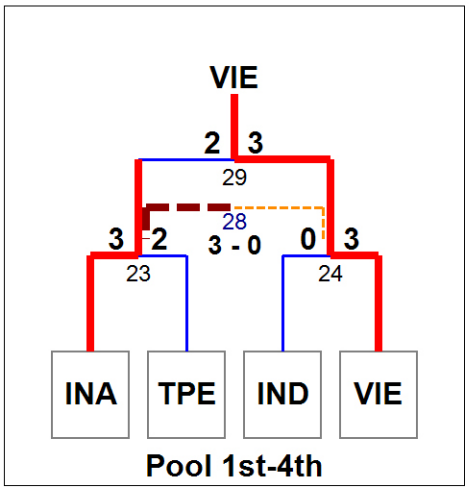

Volleyball - Pool Ranking

2023 AVC Challenge Cup For Women

Ranking - Pool 5th-8th

Matches

No	Pool	Date	Time	Teams	1	2	3	4	5	Sets	Points	Duration
21	5th-8th	2023-06-24	11:30	**AUS** vs UZB	25:21	17:25	28:26	25:19		3-1	95:91	01:47
22	5th-8th	2023-06-24	14:00	PHI vs **IRI**	20:25	13:25	16:25			0-3	49:75	01:29
26	5th-8th	2023-06-25	11:30	UZB vs **PHI**	14:25	25:13	18:25	18:25		1-3	75:88	01:49
27	5th-8th	2023-06-25	14:00	AUS vs **IRI**	20:25	25:19	18:25	20:25		1-3	83:94	01:56

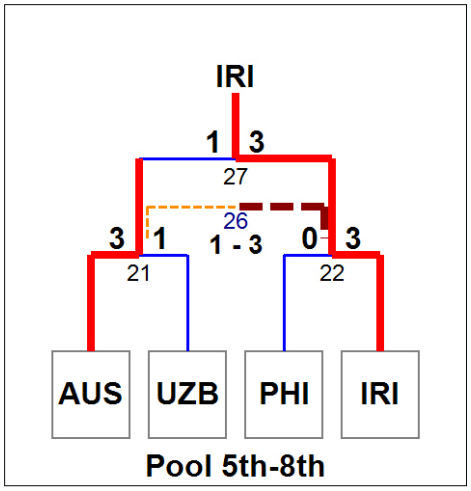

Volleyball - Pool Ranking

2023 AVC Challenge Cup For Women

Ranking - Pool 9th-11th

Statistics

Rank	Team	Matches			Details							Sets			Points		
		T	W	L	3-0	3-1	3-2	2-3	1-3	0-3	Pts	W	L	Ratio	W	L	Ratio
1	HKG	2	2	0	1	0	1	0	0	0	5	6	2	3,000	184	135	1,363
2	MGL	2	1	1	1	0	0	1	0	0	4	5	3	1,667	172	143	1,203
3	MAC	2	0	2	0	0	0	0	0	2	0	0	6	0.000	72	150	0,480

Matches

No	Pool	Date	Time	Teams	1	2	3	4	5	Sets	Points	Duration
11	9th-11th	2023-06-21	09:00	**HKG** vs MGL	25:21	25:14	22:25	22:25	15:12	3-2	109:97	02:29
20	9th-11th	2023-06-24	09:00	**MGL** vs MAC	25:9	25:11	25:14			3-0	75:34	01:05
25	9th-11th	2023-06-25	09:00	MAC vs **HKG**	12:25	12:25	14:25			0-3	38:75	01:08

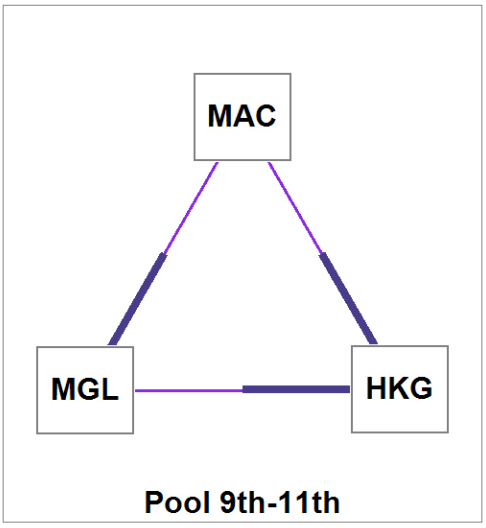

AVC 2023

AVC CHALLENGE CUP FOR WOMEN

GRESIK, EAST JAVA, INDONESIA

PUPUK INDONESIA HOLDING COMPANY

PETROKIMIA GRESIK Agroindustry Solution

PBVSI

Vidio

moji

Asian Volleyball Confederation

SMMSPORT MIKASA Gerflor GRAND SPORT Senoh Sports Equipment

Get involved

Keep the ball flying !

Understand the game